Discrete Time Adaptive Linear Control for Cloud Applications

Martina Maggio
Lund University

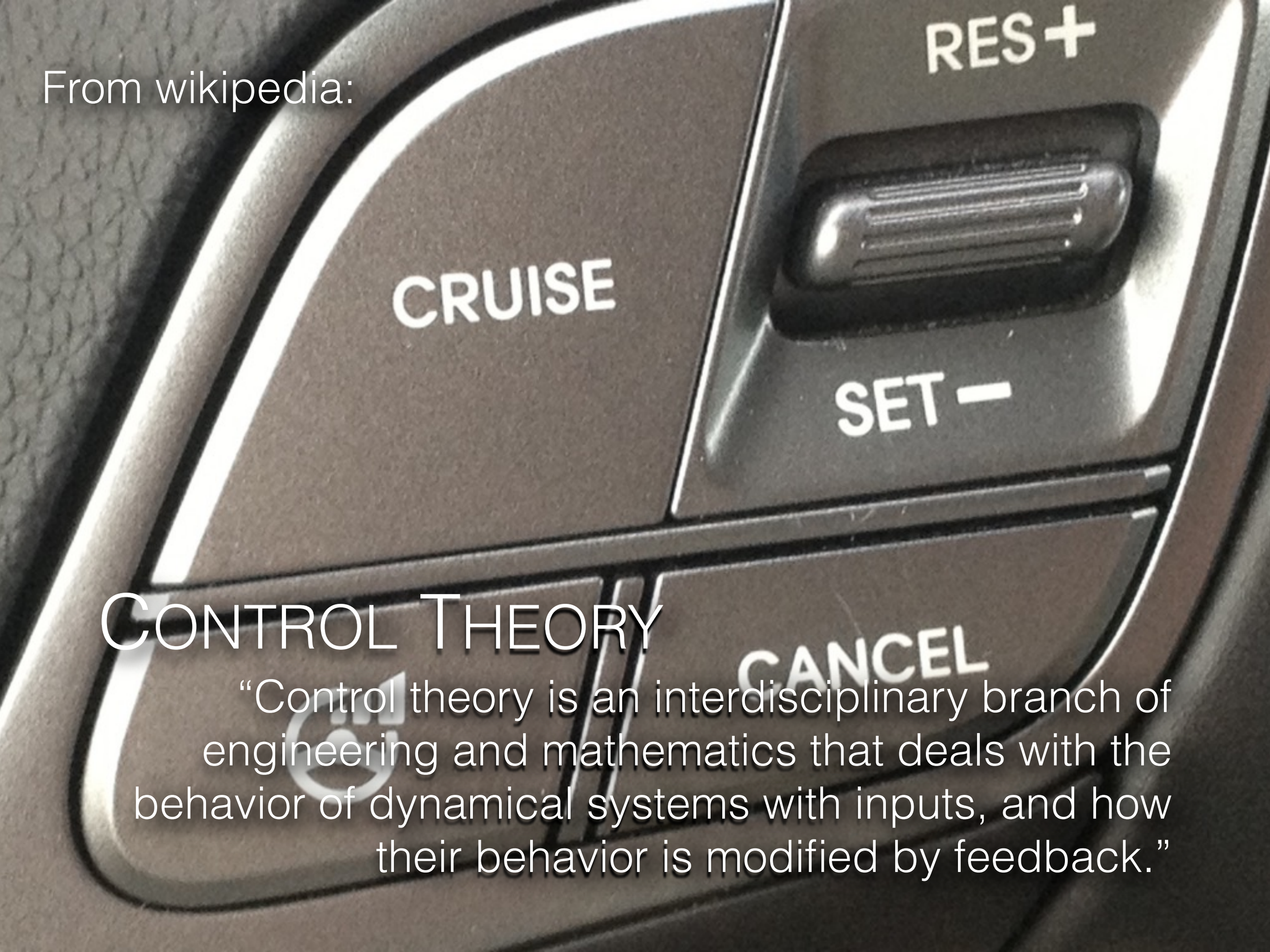

From wikipedia:

Control Theory

"Control theory is an interdisciplinary branch of engineering and mathematics that deals with the behavior of dynamical systems with inputs, and how their behavior is modified by feedback."

CONTROL ARCHITECTURE

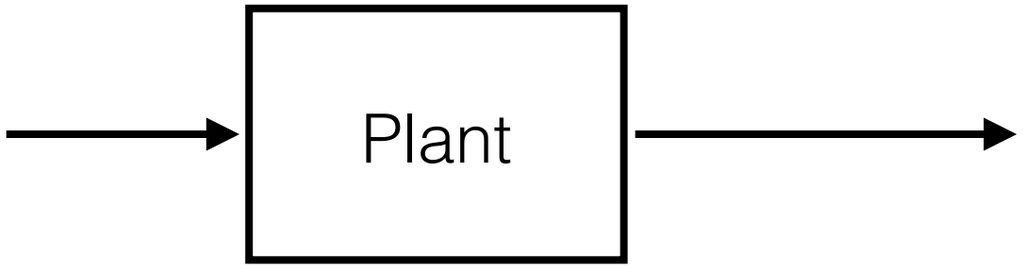

CONTROL ARCHITECTURE

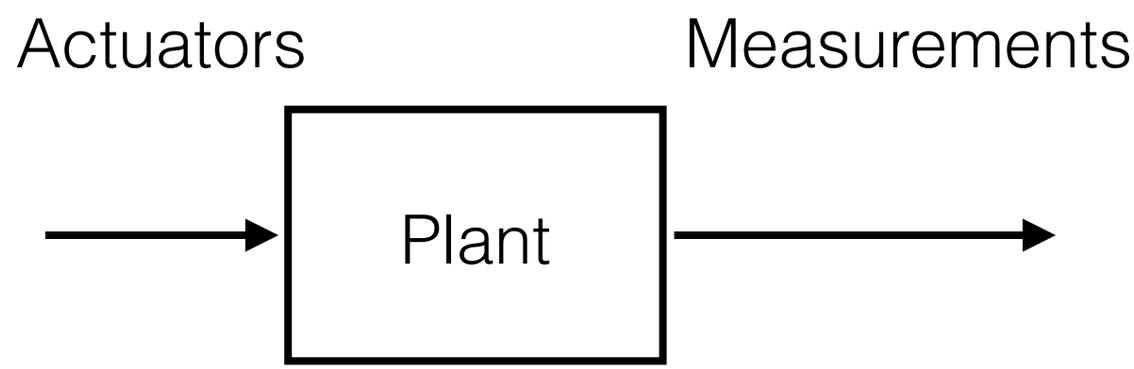

CONTROL ARCHITECTURE

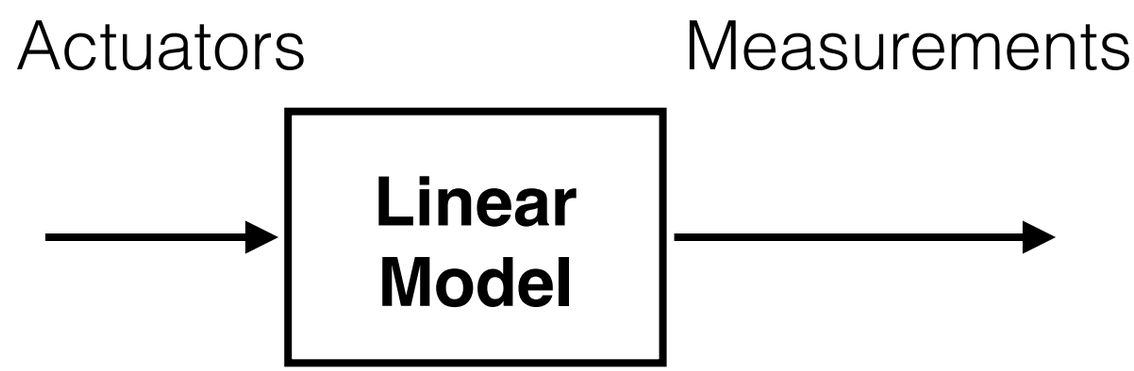

CONTROL ARCHITECTURE

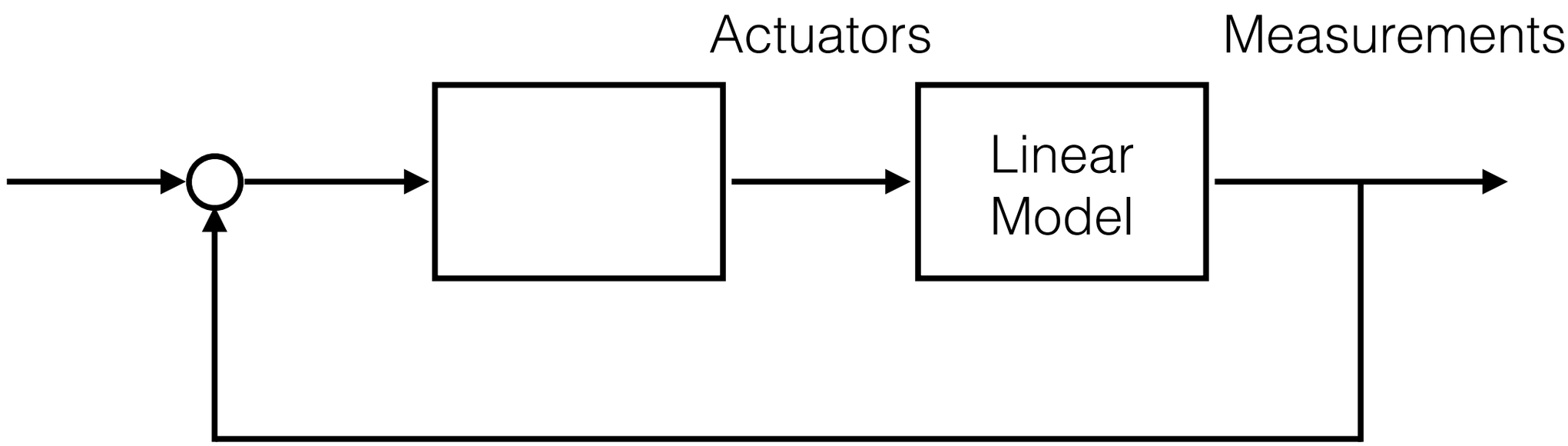

CONTROL ARCHITECTURE

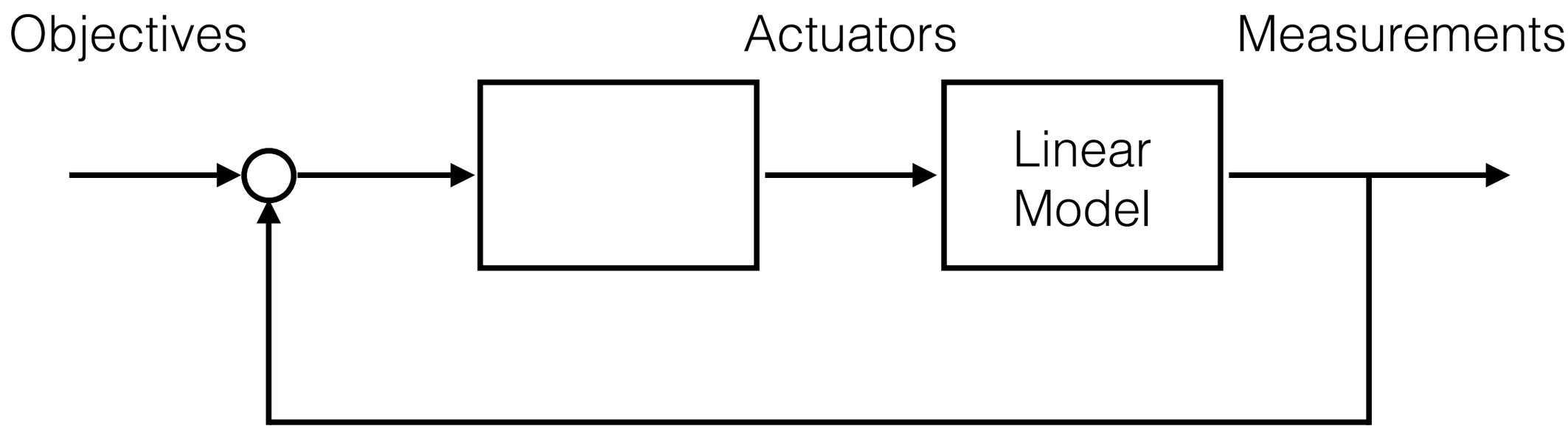

CONTROL ARCHITECTURE

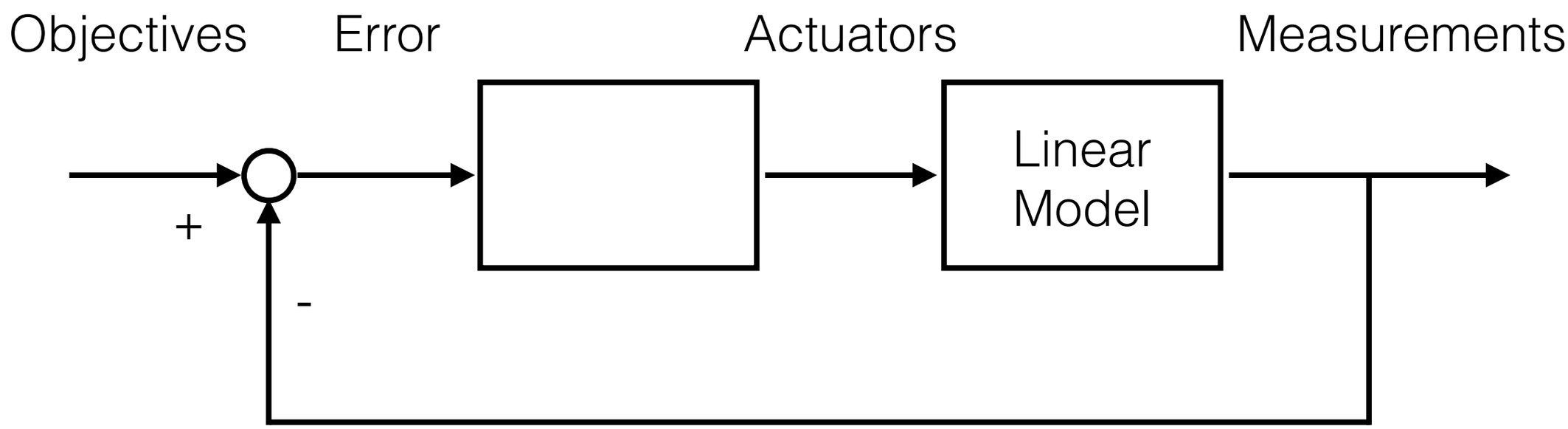

CONTROL ARCHITECTURE

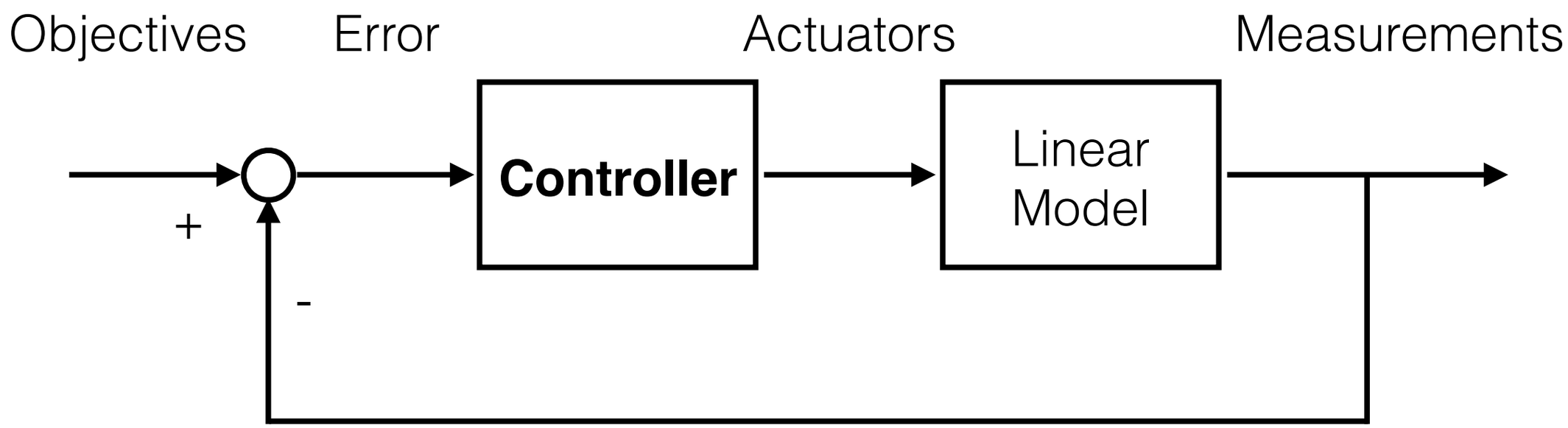

CONTROL ARCHITECTURE

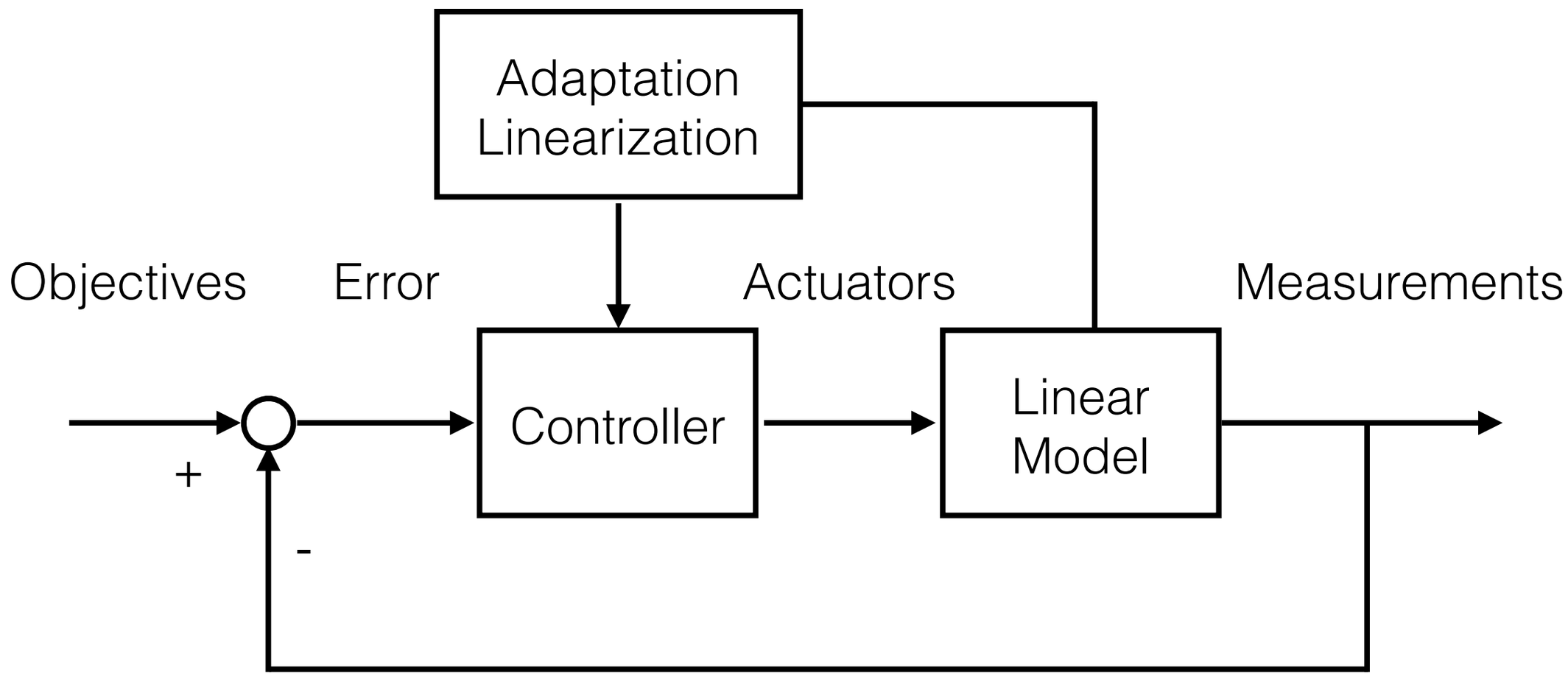

Adaptive control: updating the **controller** online based on data from the software

CONTROL ARCHITECTURE

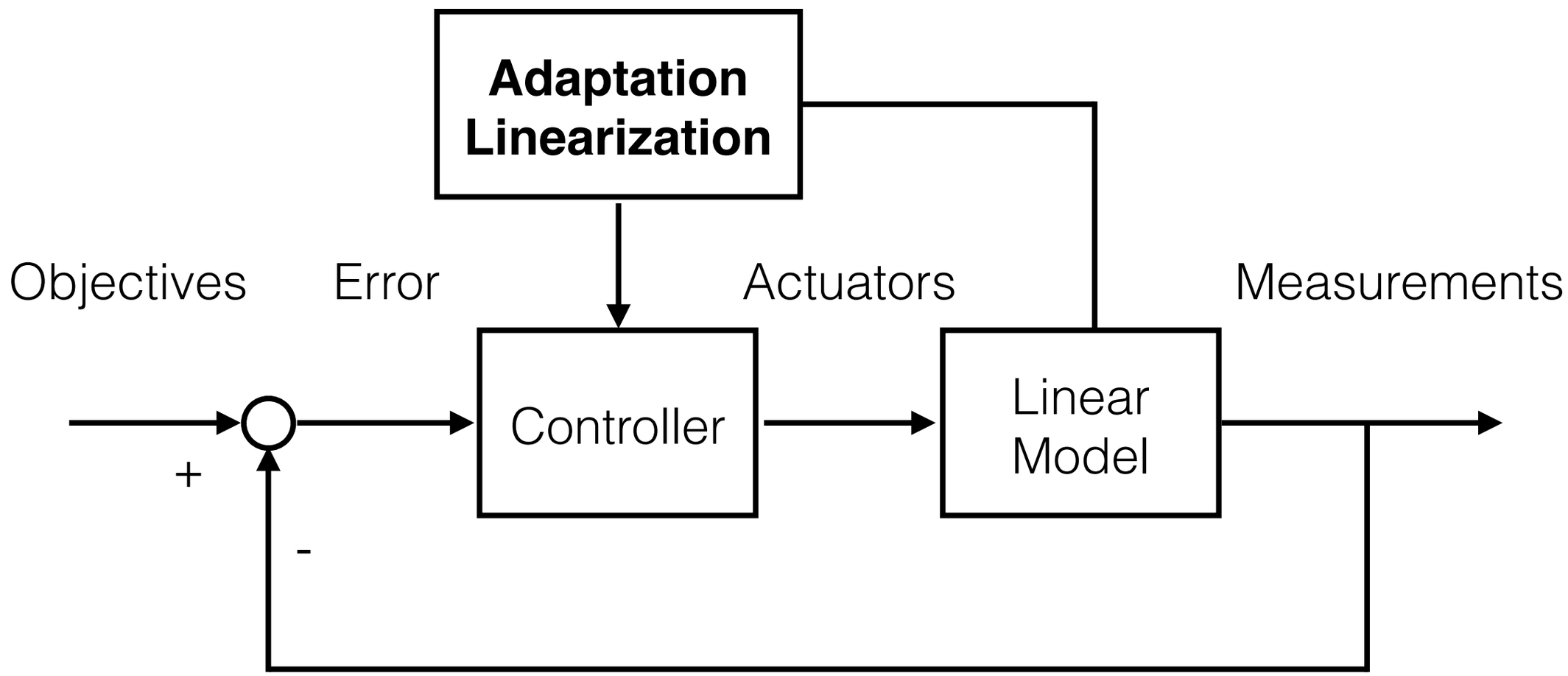

"Automated design of self-adaptive software with control theoretical formal guarantees" A. Filieri, H, Hoffmann, M. Maggio; ICSE 2014

CONTROL CONTRIBUTION

- Startup:
  - we perform *experiments* on the system
  - we build a *first-order linear model*, using the results
  - we *automatically* synthesize a controller
- The controller is up and running autonomously:
  - we *keep the model updated* during runtime
  - in case of extreme error, we *trigger a new startup*

"Automated design of self-adaptive software with control theoretical formal guarantees" A. Filieri, H, Hoffmann, M. Maggio; ICSE 2014

FORMAL GUARANTEES

- **Stability**: objectives reached when feasible
- **No-overshooting**: without overshooting
- **Short settling time**: in a short time
- **Robustness**: despite model inaccuracies

CONTROLLING THE CLOUD

BROWNOUT

BROWNOUT

A brownout is an intentional or unintentional drop in voltage in an electrical power supply system. Intentional brownouts are used for load reduction in emergency conditions.

BROWNOUT

A brownout is an intentional or unintentional drop in voltage in an electrical power supply system. Intentional brownouts are used for load reduction in emergency conditions.

Tokyo Tower Brownout

PREDICTABILITY: MOTIVATION

- ✓ 82% of end-users give up on a lost payment transaction*
- ✓ 25% of end-users leave if load time > 4s**
- ✓ 1% reduced sale per 100ms load time**
- ✓ 20% reduced income if 0.5s longer load time***

*JupiterResearch, **Amazon, ***Google

STATE OF THE ART

Increase capacity

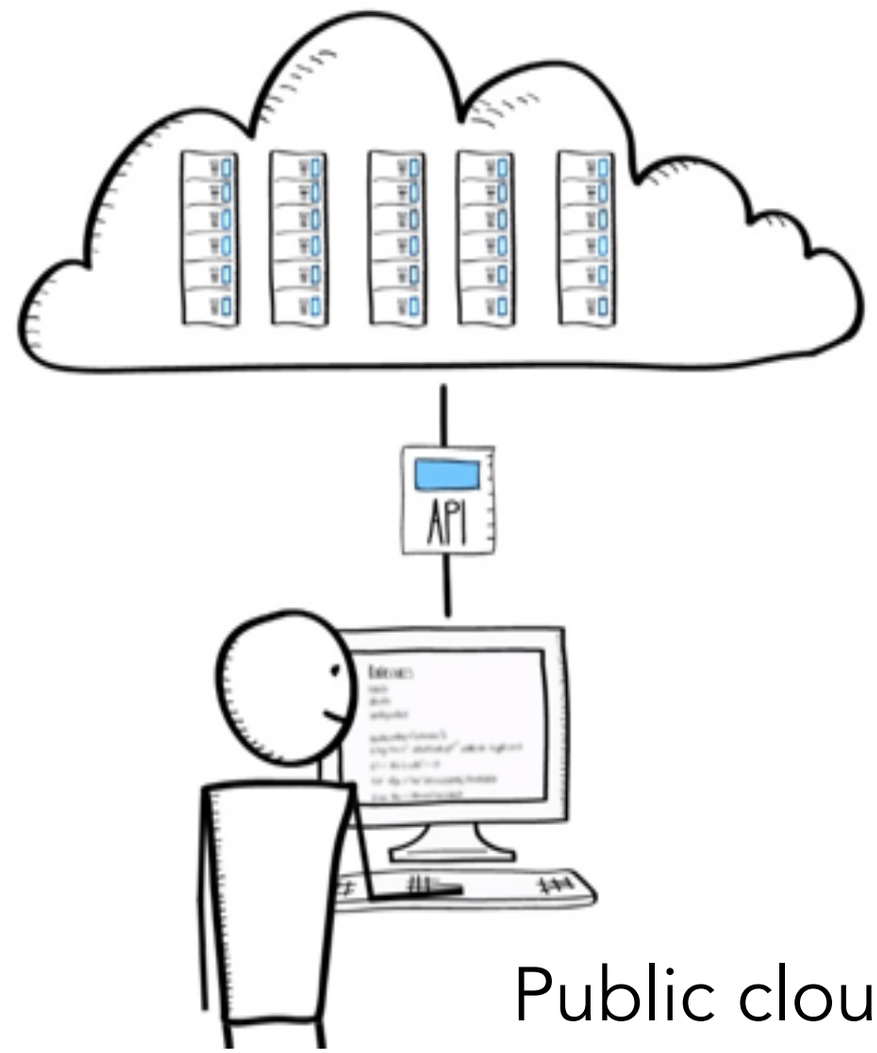

Public cloud

BROWNOUT

DISABLE NON-ESSENTIAL CONTENT ON DEMAND

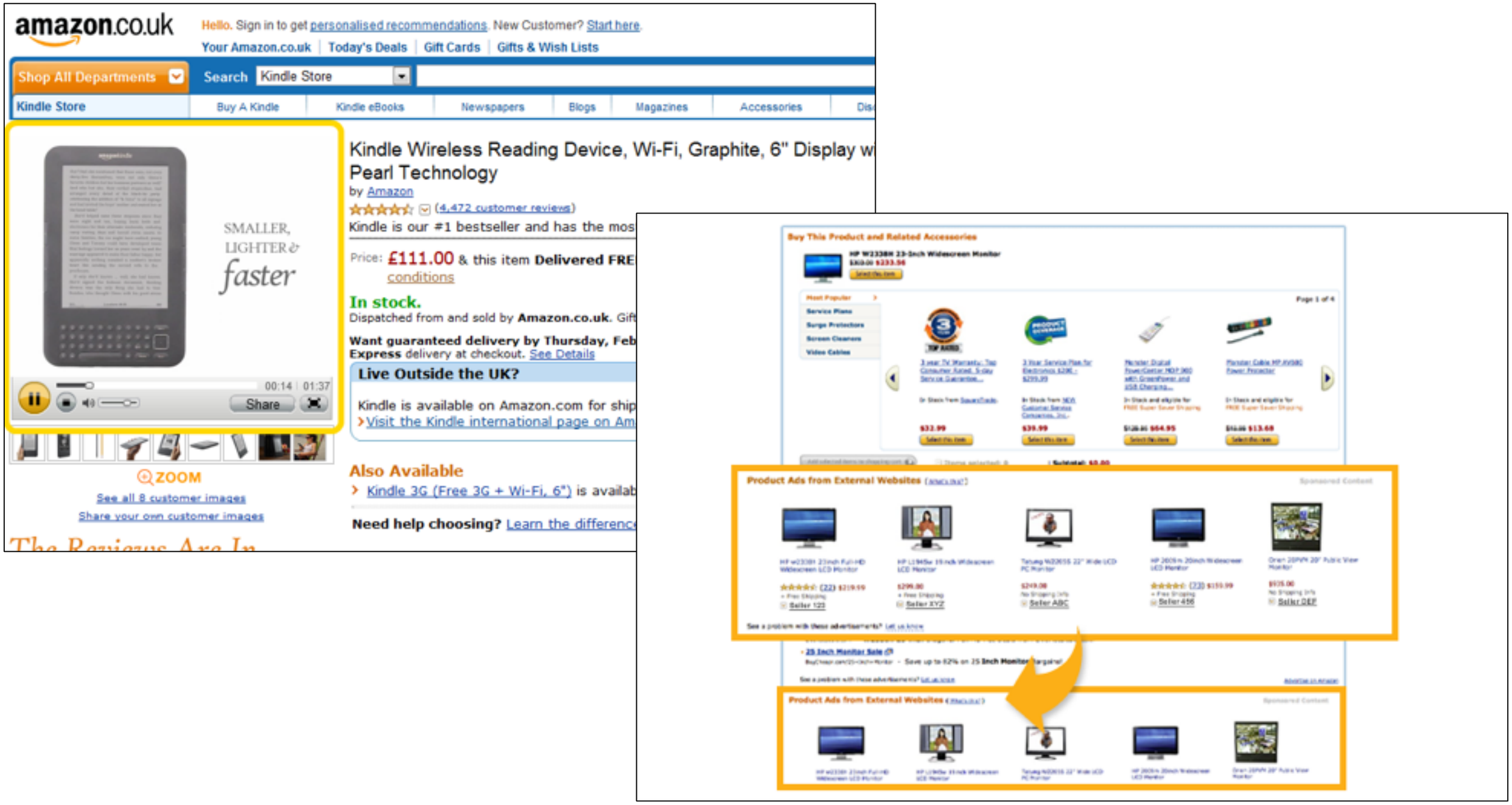

CONTROL ARCHITECTURE

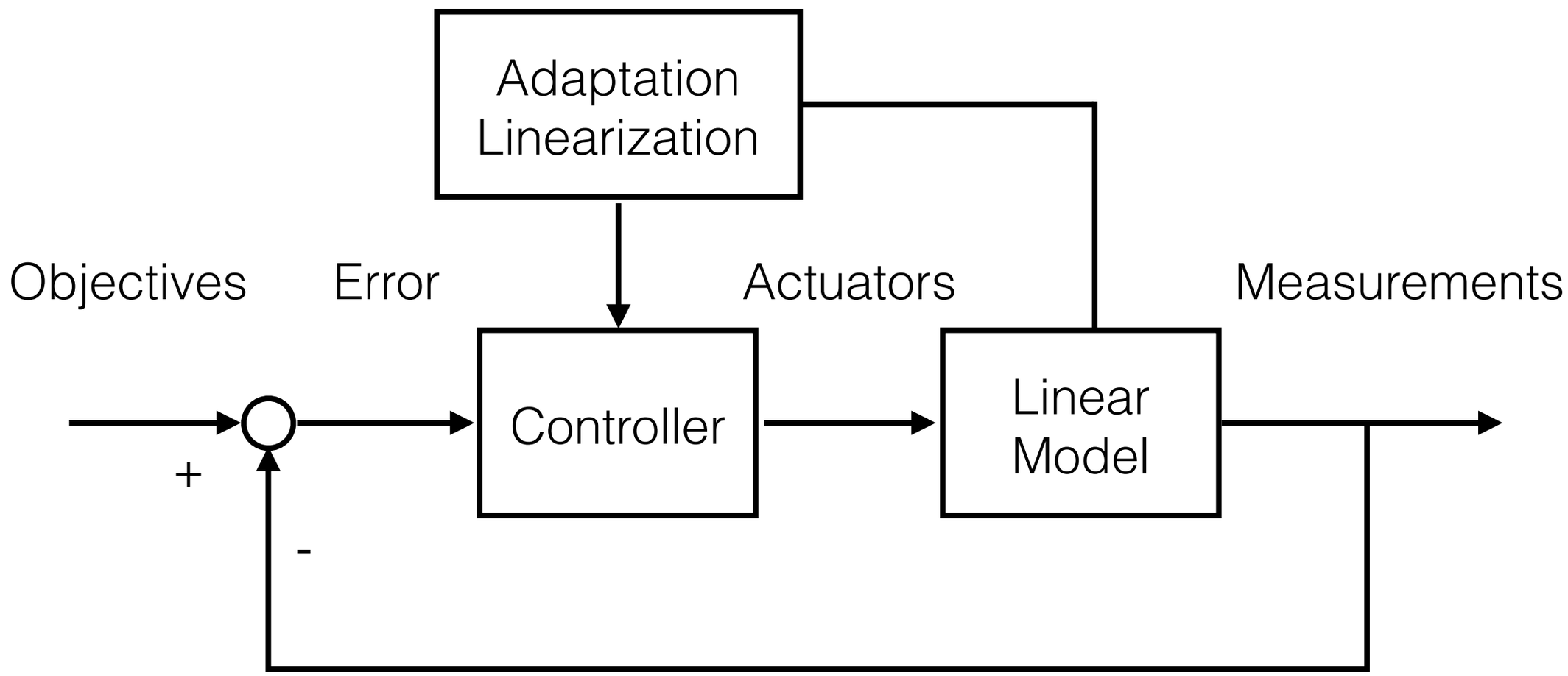

CONTROL ARCHITECTURE

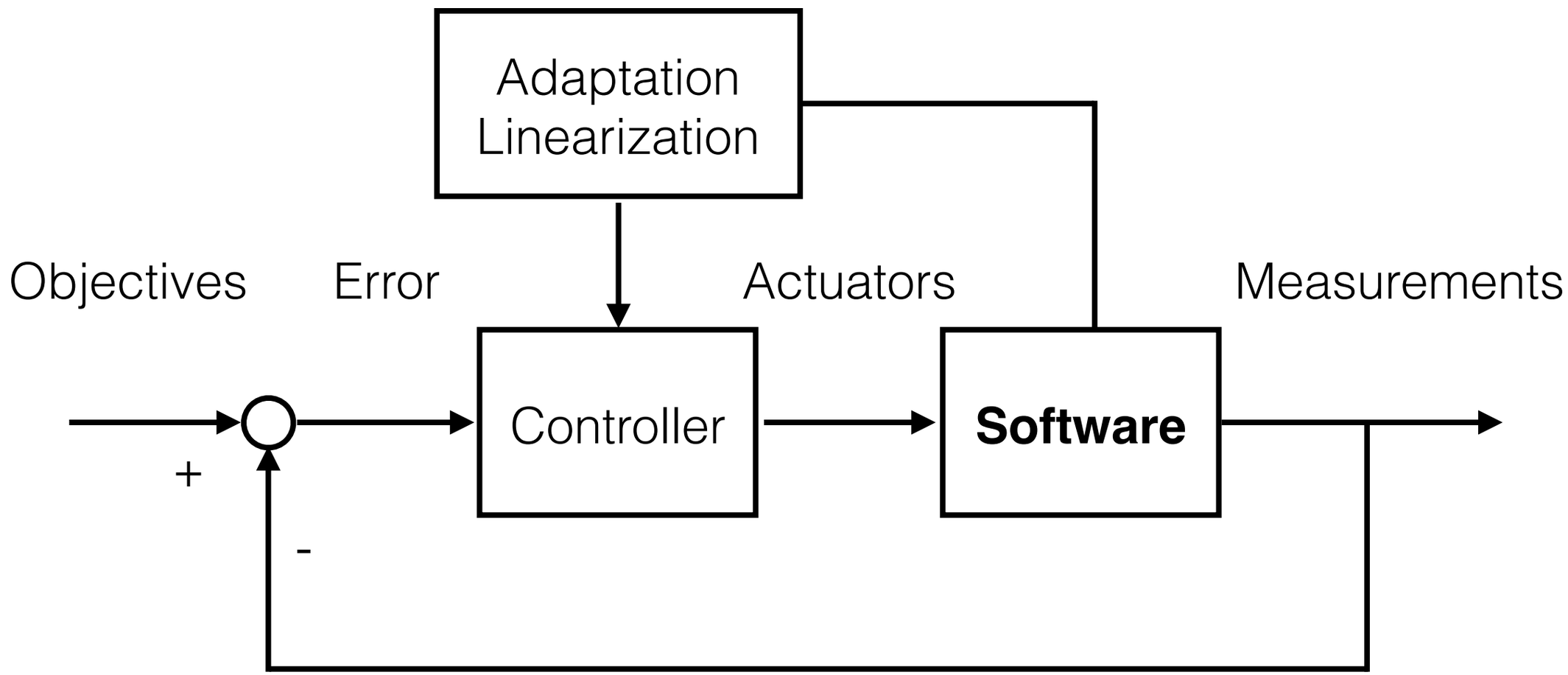

CONTROL ARCHITECTURE

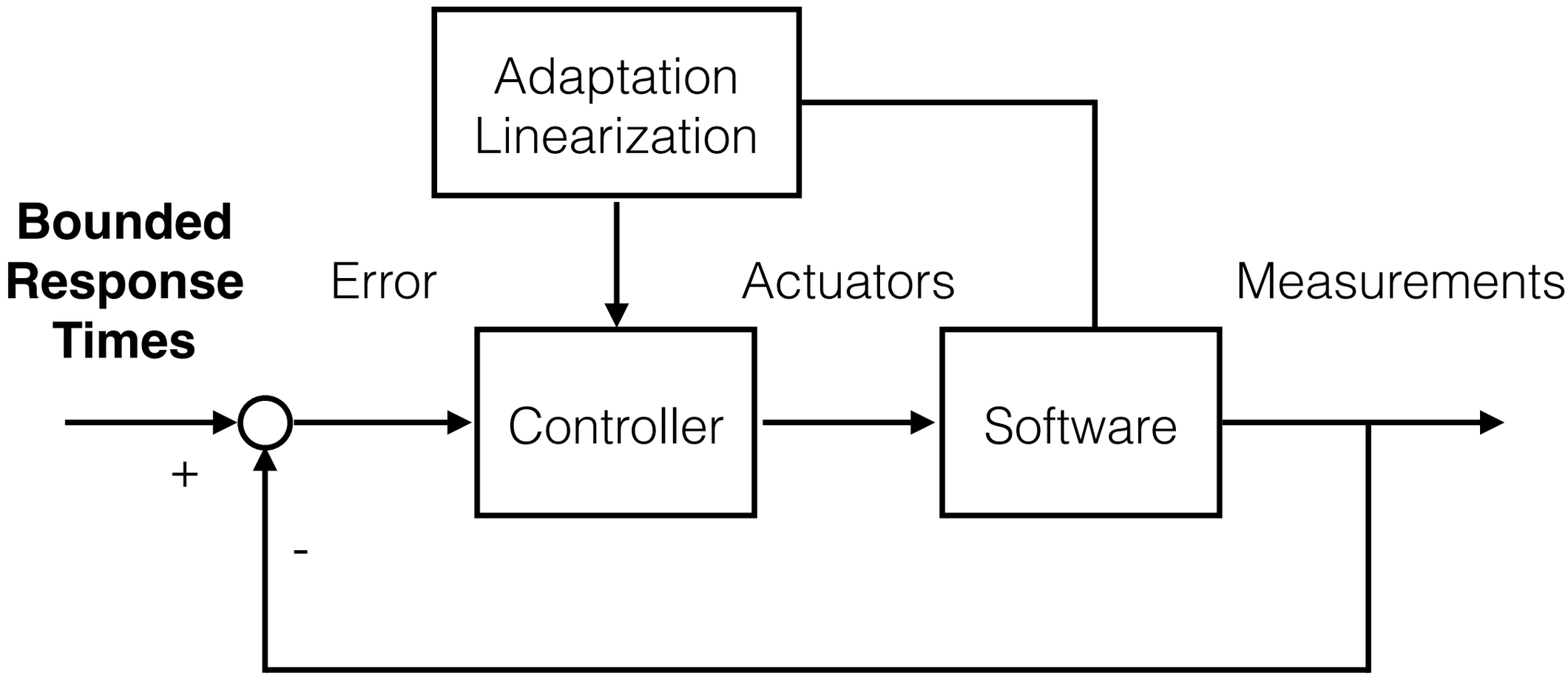

The 95th percentile of the responses should be produced in less than 1 second

CONTROL ARCHITECTURE

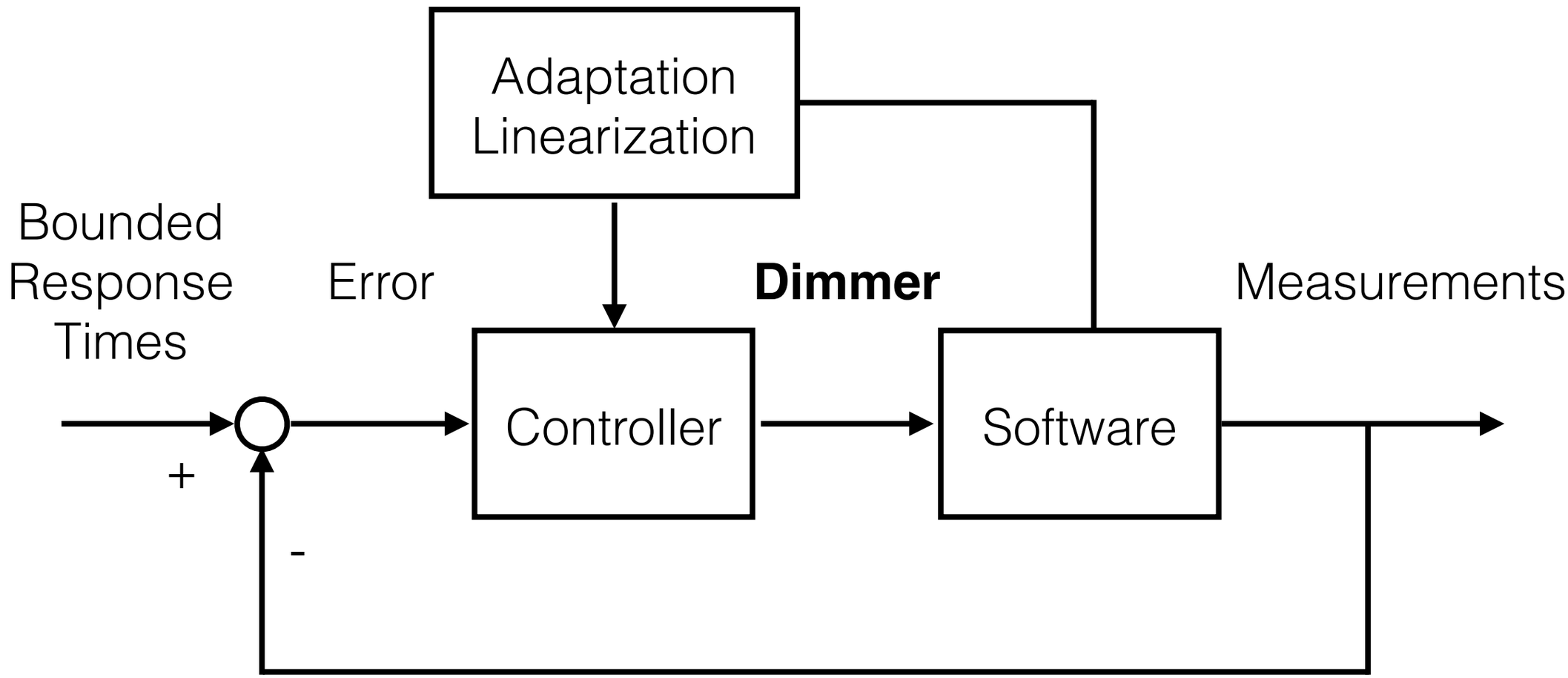

The dimmer denotes the percentage of requests served with the optional computation enabled

CONTROL ARCHITECTURE

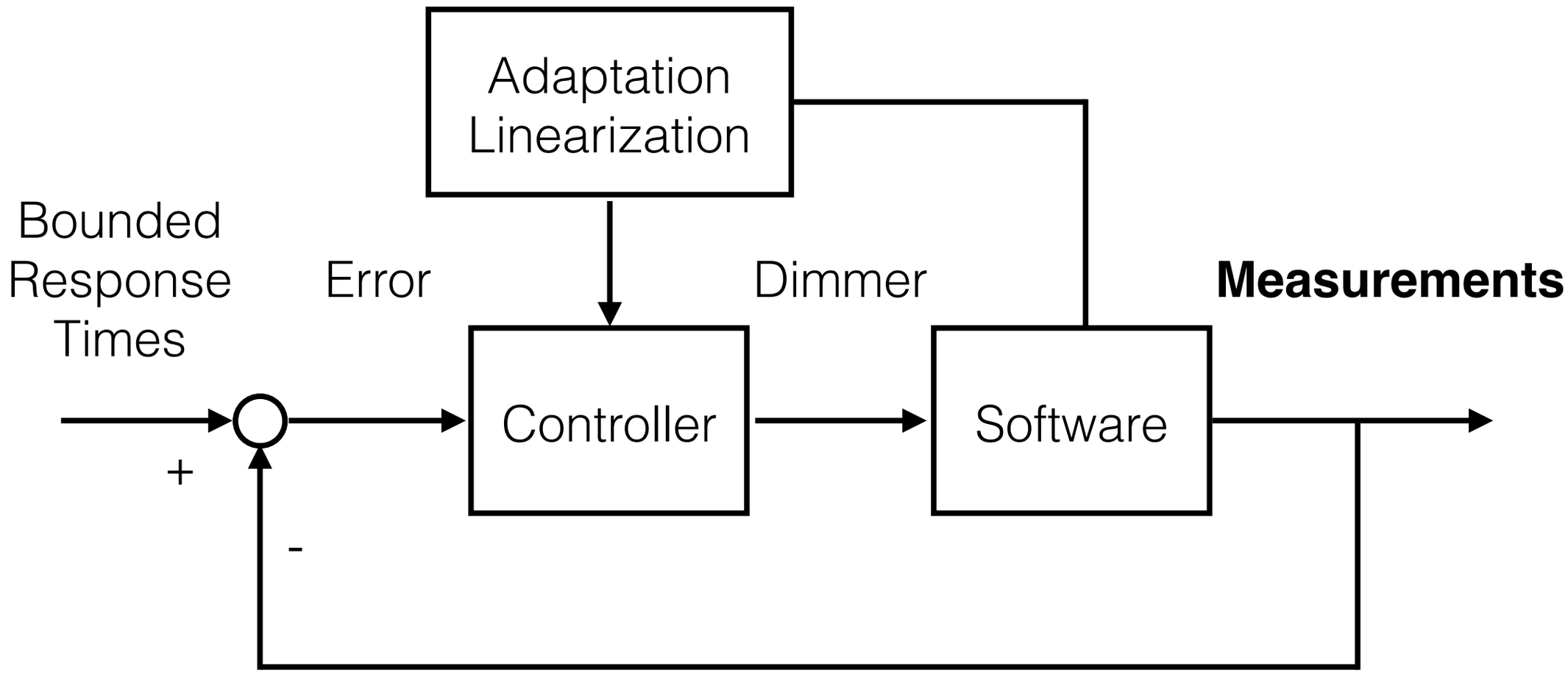

We need to measure the 95th percentile of the response times to know how far we are from our objective

CONTROL ARCHITECTURE

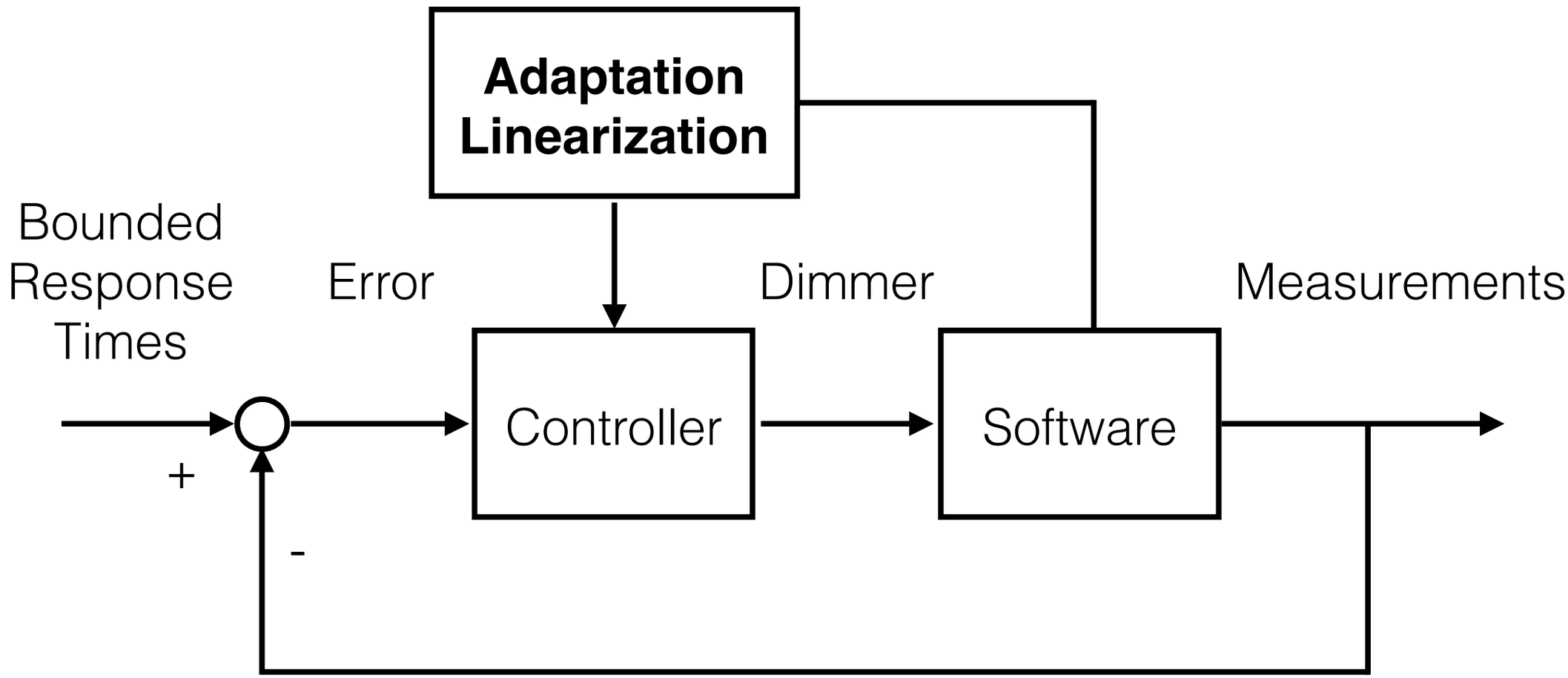

The adaptation strategy linearizes the system and takes care of runtime changes (like slow downs due to memory leaks)

CONTROL ARCHITECTURE

- Software equation-based model:

$$y(k+1) = y(k) + \alpha u(k)$$

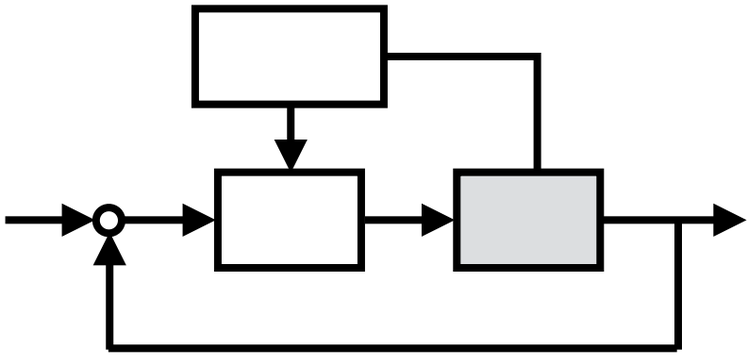

CONTROL ARCHITECTURE

- Software equation-based model:

The value of α determines the runtime behavior of the metric that is monitored

$$y(k+1) = y(k) + \alpha u(k)$$

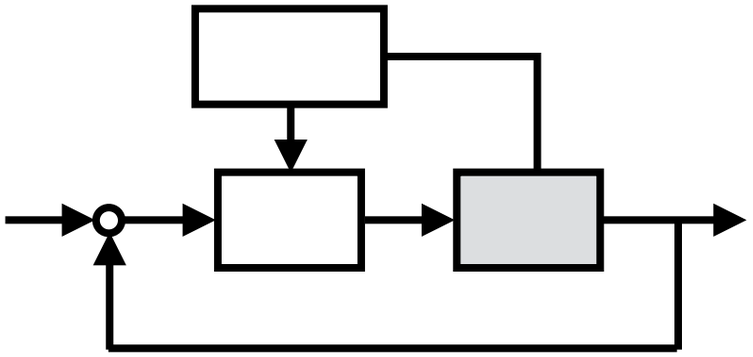

CONTROL ARCHITECTURE

- Equation-based controller:

$$u(k+1) = u(k) + \frac{1-p}{\hat{\alpha}} e(k)$$

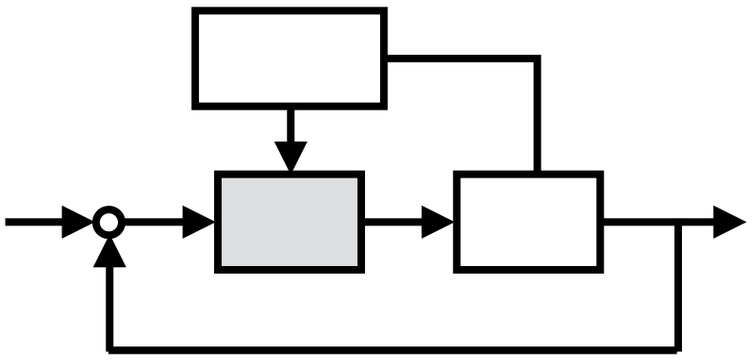

CONTROL ARCHITECTURE

- Equation-based controller:

$$u(k+1) = u(k) + \frac{1-p}{\hat{\alpha}} e(k)$$

The controller uses an online estimate of α (corresponds to linearizing around the operating point)

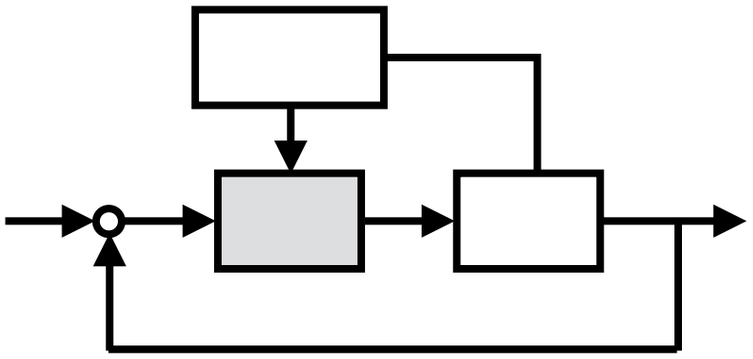

CONTROL ARCHITECTURE

- Closed loop system:

$$G(z) = \frac{1-p}{z-p}$$

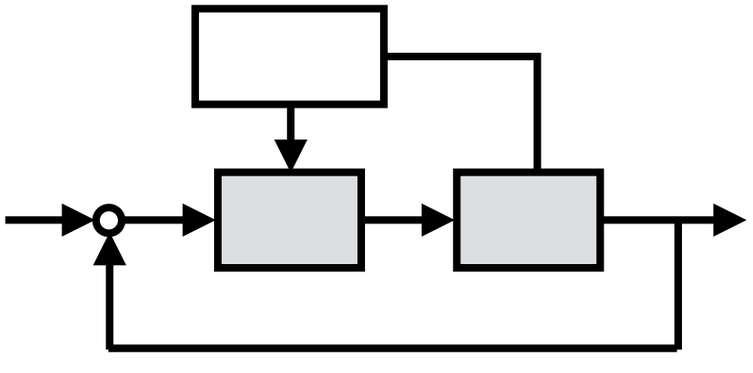

CONTROL ARCHITECTURE

- Closed loop system:

$$G(z) = \frac{1-p}{z - p}$$

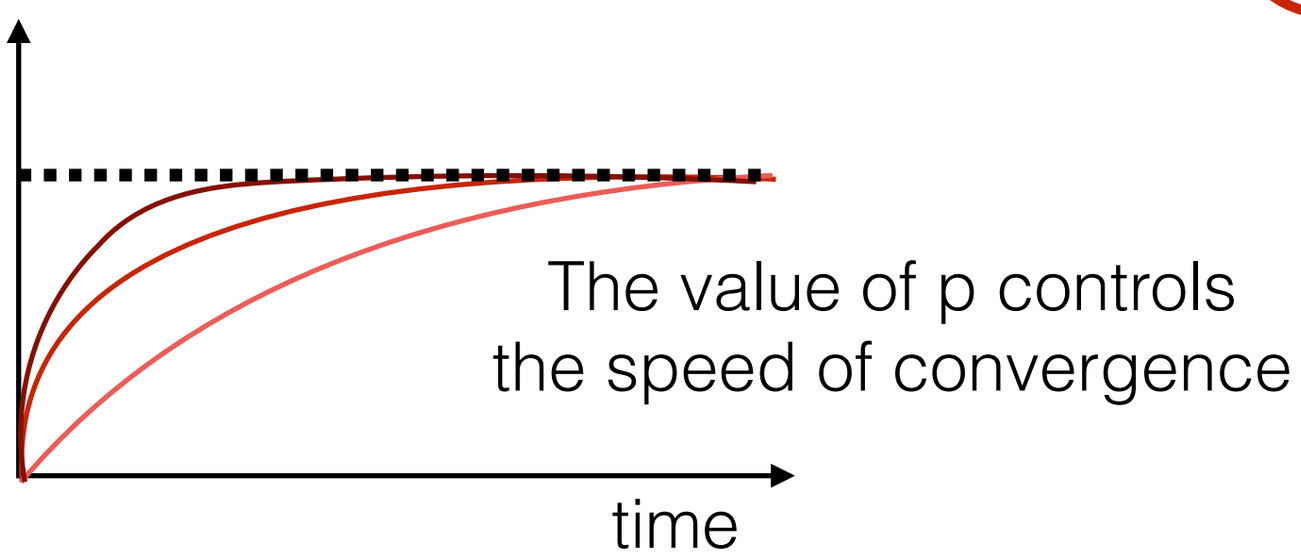

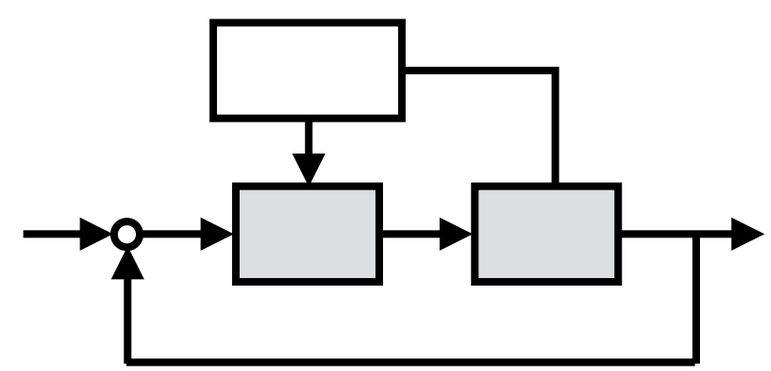

CONTROL ARCHITECTURE

- Robustness to model inaccuracies: $\alpha = \hat{\alpha} \cdot \Delta\alpha$

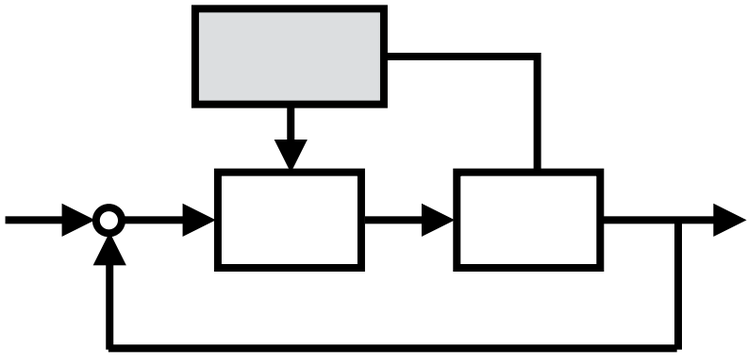

CONTROL ARCHITECTURE

- Robustness to model inaccuracies: $\alpha = \hat{\alpha} \cdot \Delta\alpha$

$$0 \leq \Delta\alpha \leq \frac{2}{1-p}$$

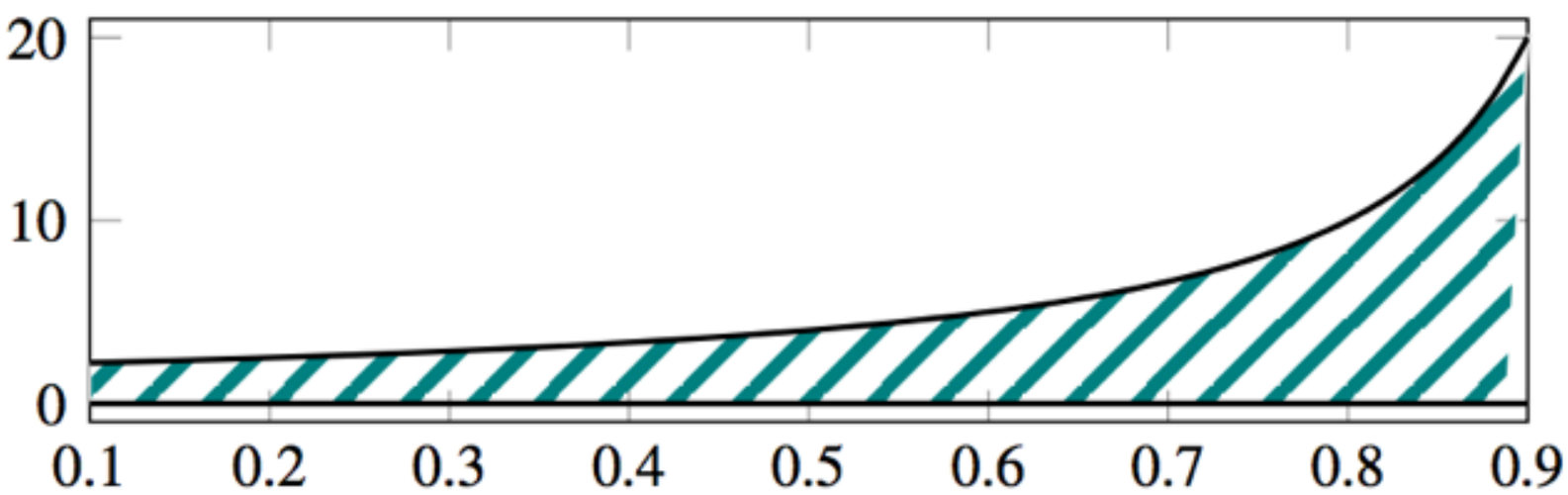

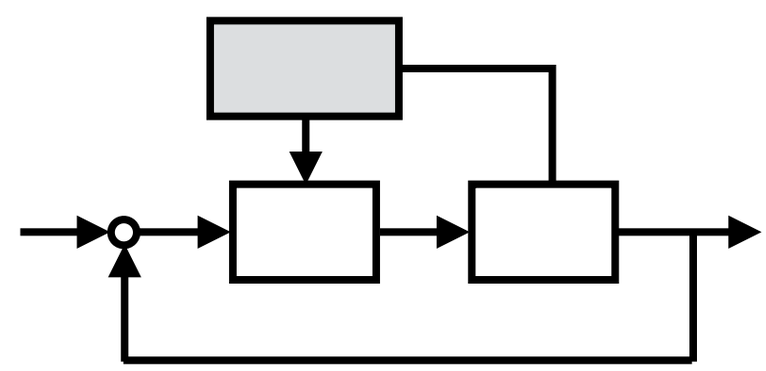

BROWNOUT

- Single replica
- Graceful degradation

➡ Minimally intrusive (<200 lines of code)

➡ Application developers **mark optional code**

➡ **Automatic control strategy** to select when the optional computations should be turned on and off

EXAMPLE: E-COMMERCE WEBSITE

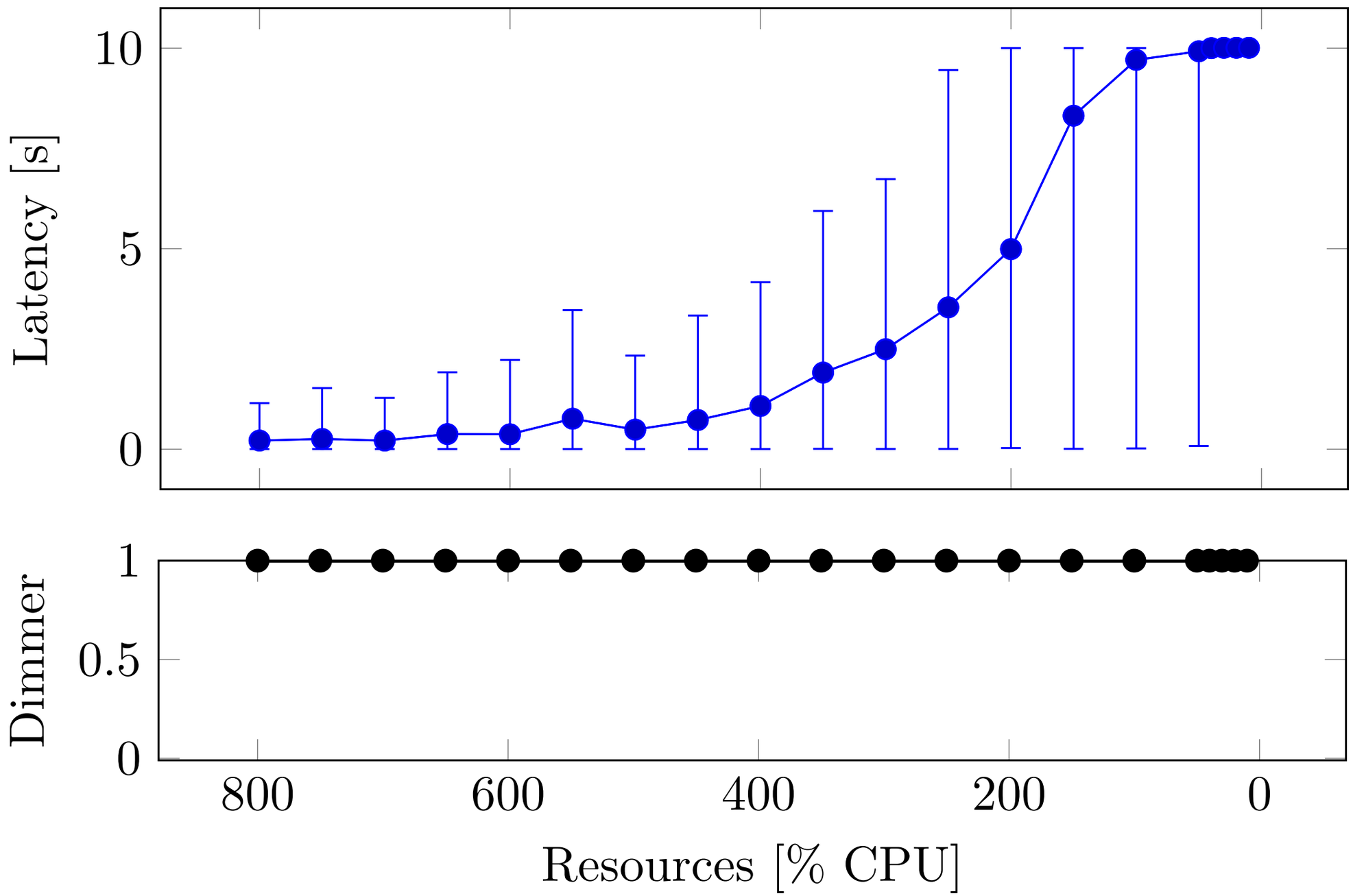

EXAMPLE: E-COMMERCE WEBSITE

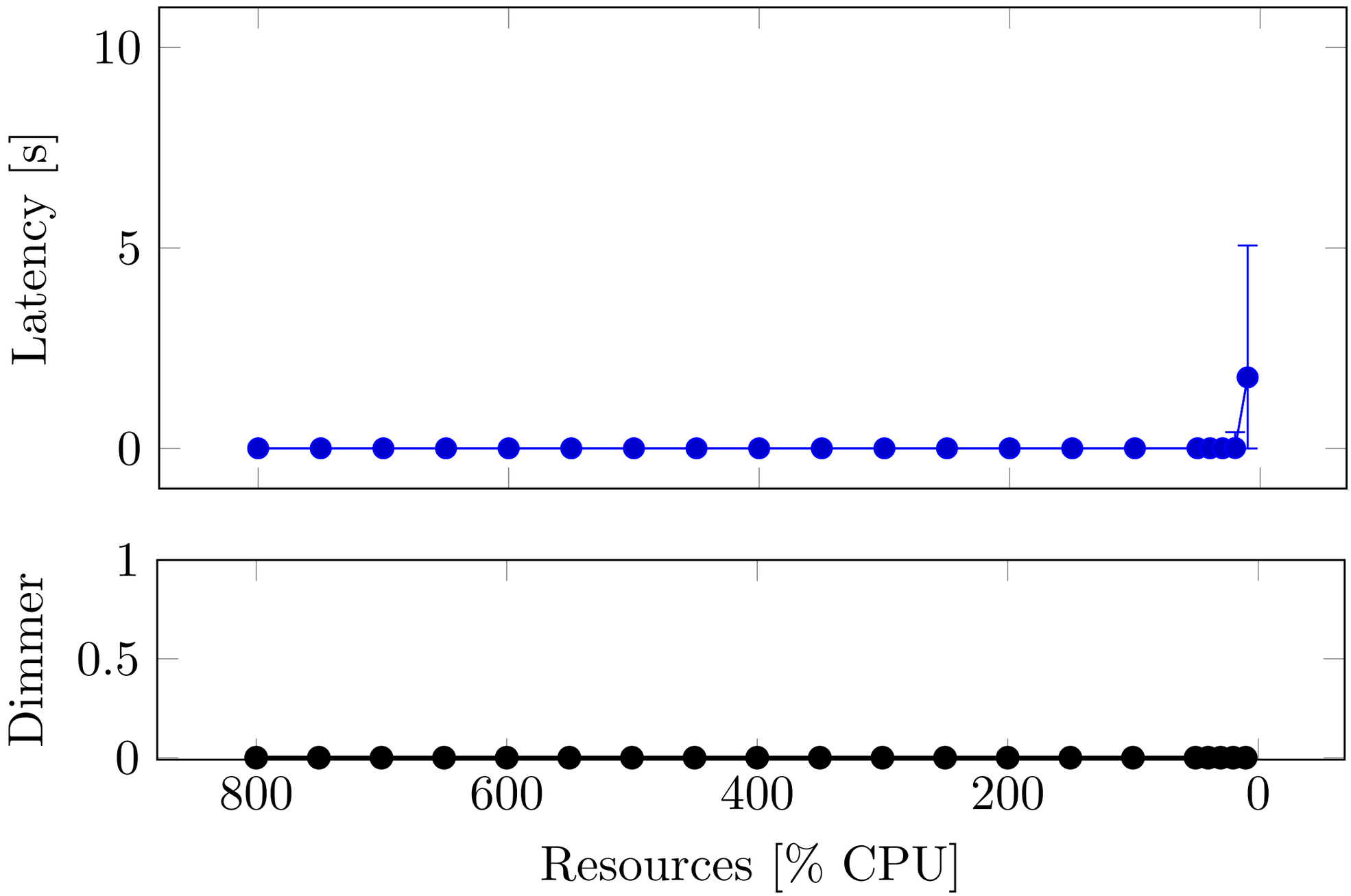

EXAMPLE: E-COMMERCE WEBSITE

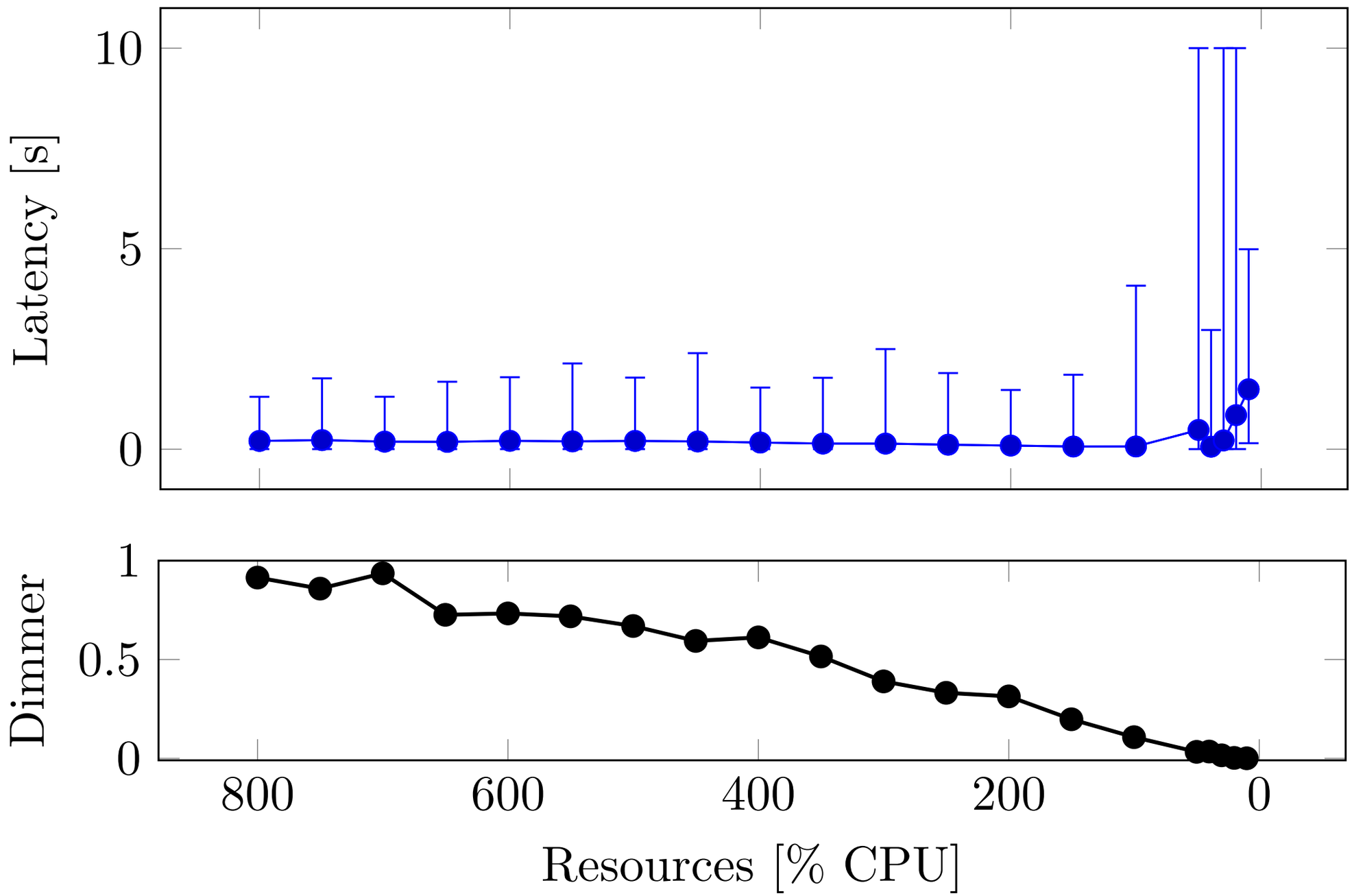

AUTOMATIC CONTROL STRATEGY

- Compute **statistics** from response times
- Use statistics as a **feedback** signal
- Update the current model of the system (linearization)
  - ➡ Control strategy: selects the probability of executing the optional code (dimmer)

"Brownout: building more robust cloud applications"
C. Klein, M. Maggio, K.-E. Årzén, F. Hernández-Rodriguez, ICSE 2014

AUTOMATIC CONTROL STRATEGY

- Implemented and tested:
  - Adaptive PI controller
  - Adaptive PID controller
  - Deadbeat controller
  - Feedforward plus feedback controller

"Control strategies for predictable brownouts in cloud computing"
M. Maggio, C. Klein, K.-E. Årzén, IFAC WC 2014

AUTOMATIC CONTROL STRATEGY

- Implemented and tested:
  - **Adaptive** PI controller
  - Adaptive PID controller
  - Deadbeat controller
  - Feedforward plus feedback controlle

Adaptive means that the controller behavior changes depending on the current system's behavior via identification and linearization

"Control strategies for predictable brownouts in cloud computing"
M. Maggio, C. Klein, K.-E. Årzén, IFAC WC 2014

EXPERIMENTAL VALIDATION

EXPERIMENT WITH RUBBOS AND VARYING USERS/RESOURCES

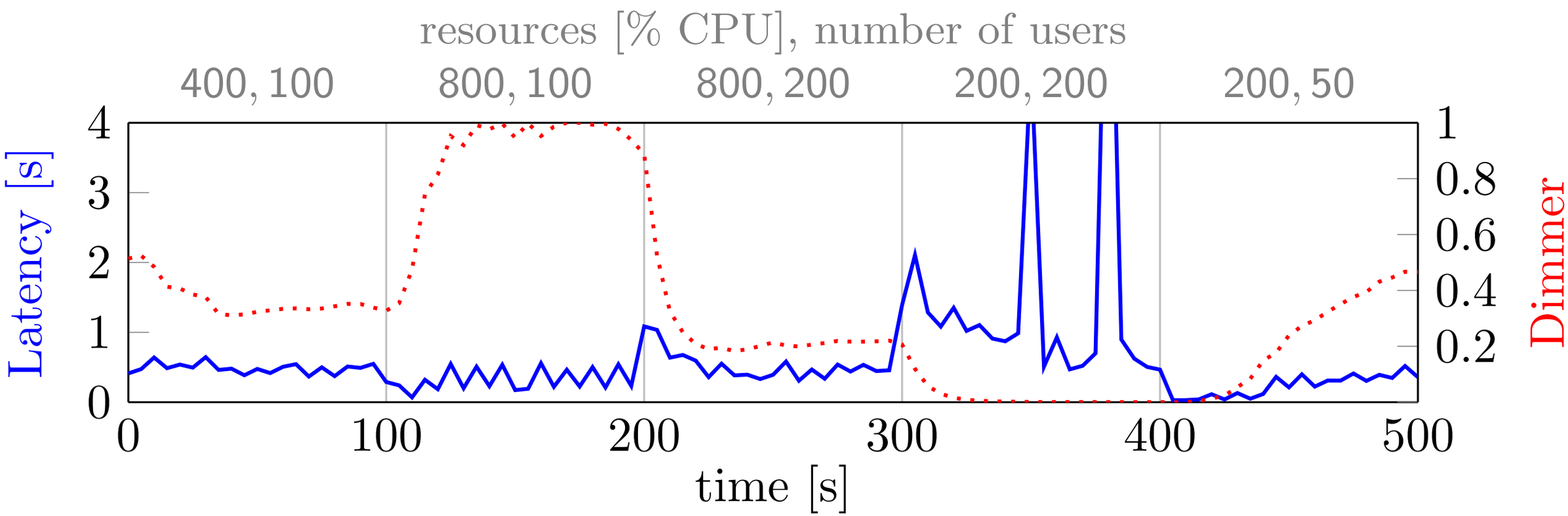

STATISTICAL VALIDATION

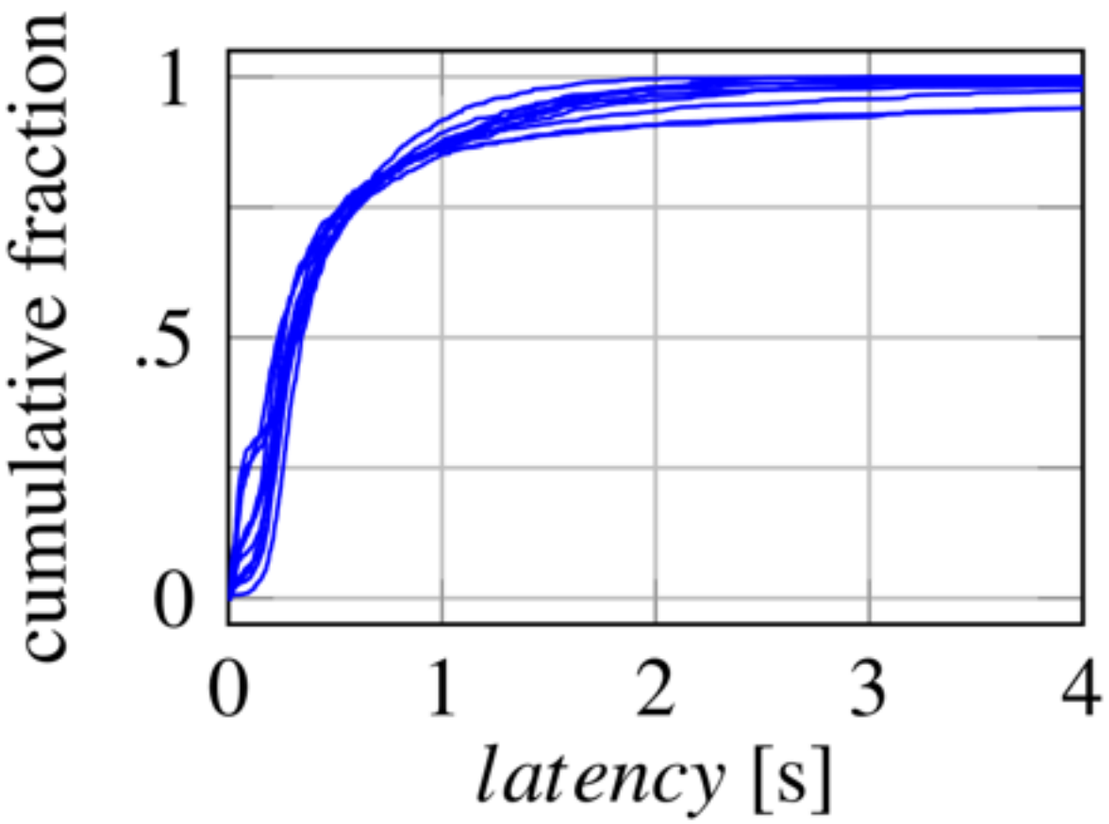

With control

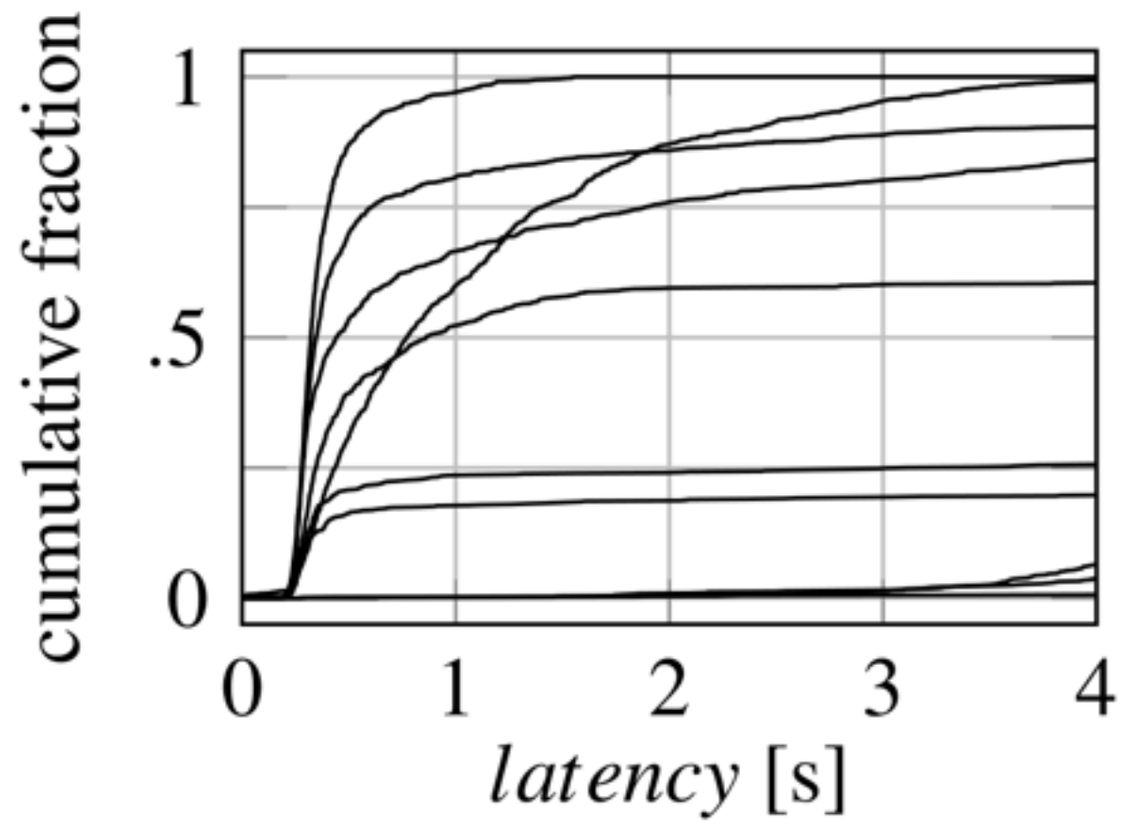

Without control

SCALING UP

- Multiple replicas
- Need load balancing:
  - Based on latencies
  - SQF
  - Brownout-aware (PIBH, EPBH)

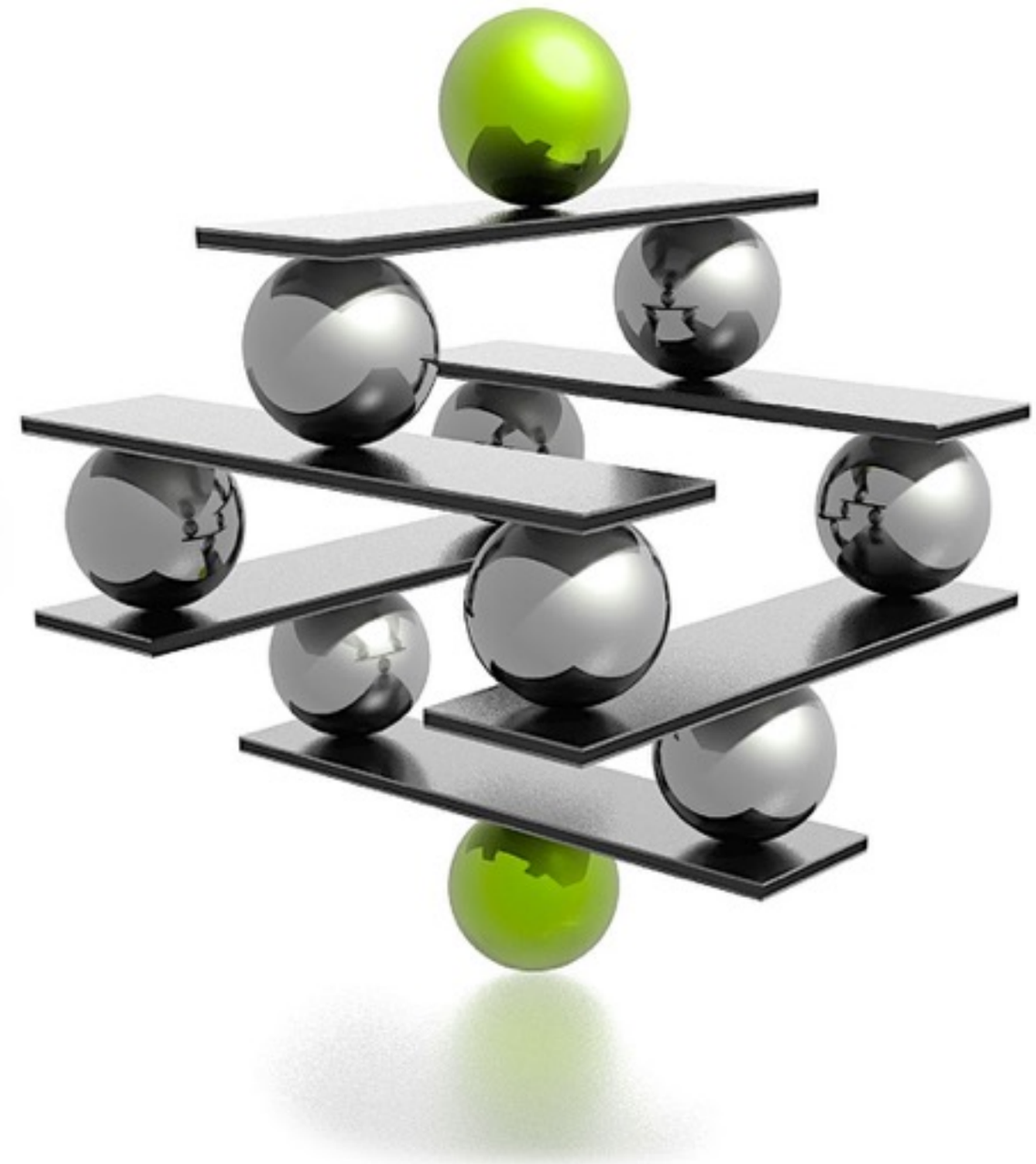

"Control-theoretical load-balancing for cloud applications with brownout"
J. Dürango, M. Dellkrantz, M. Maggio, C. Klein, A.V. Papadopoulos, F. Hernández-Rodriguez, E. Elmroth, K.-E. Årzén, CDC 2014

IMPROVING FAULT-TOLERANCE

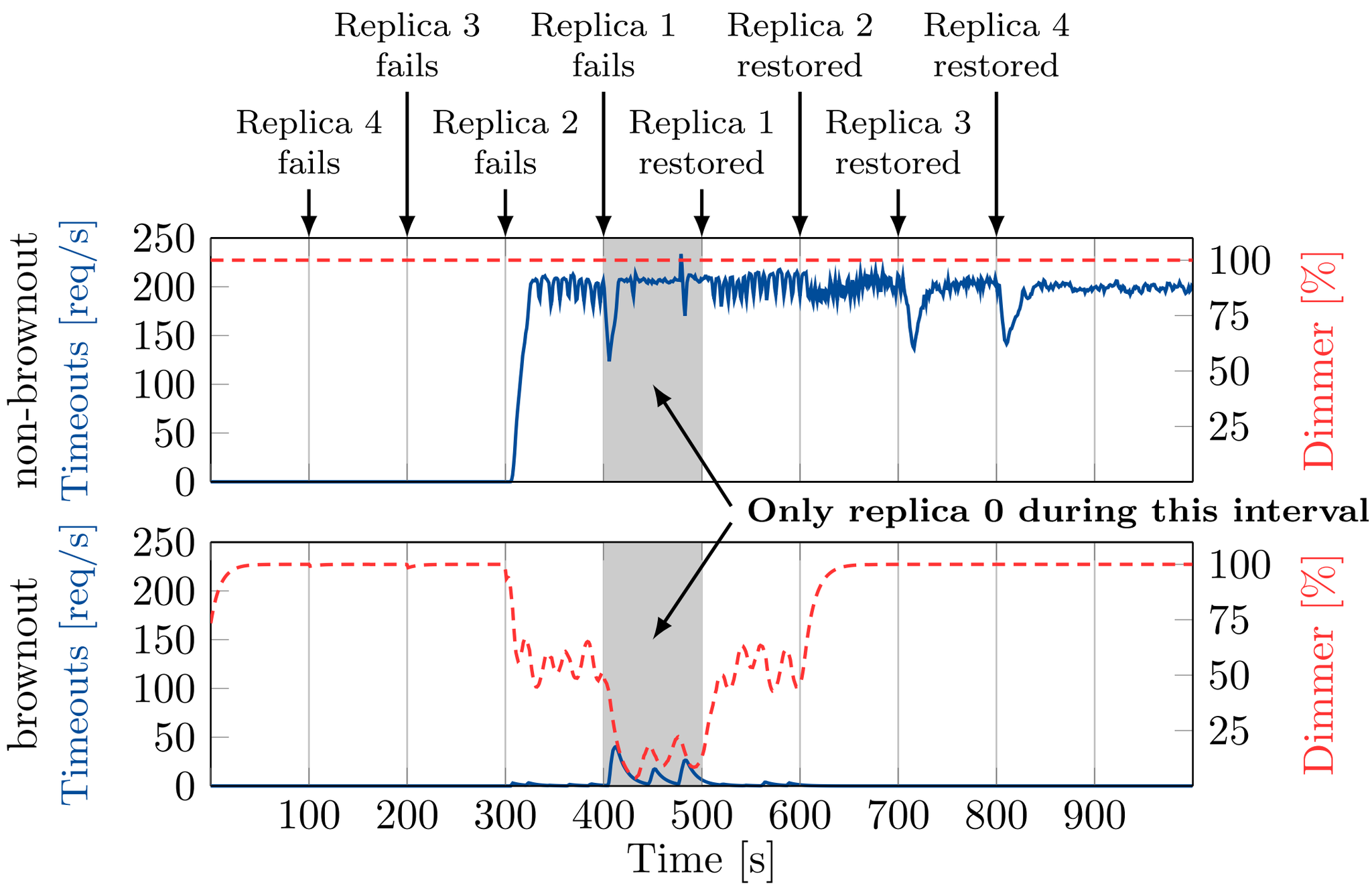

"Improving Cloud Service Resilience using Brownout-Aware Load-Balancing"
C. Klein, A.V. Papadopoulos, M. Dellkrantz, J. Dürango, M. Maggio, K.-E. Årzén, F. Hernández-Rodriguez, and E. Elmroth, SRDS 2014

CONCLUSION

- Bounded response times
- Improved fault tolerance
- Formal guarantees
- Minimally intrusive

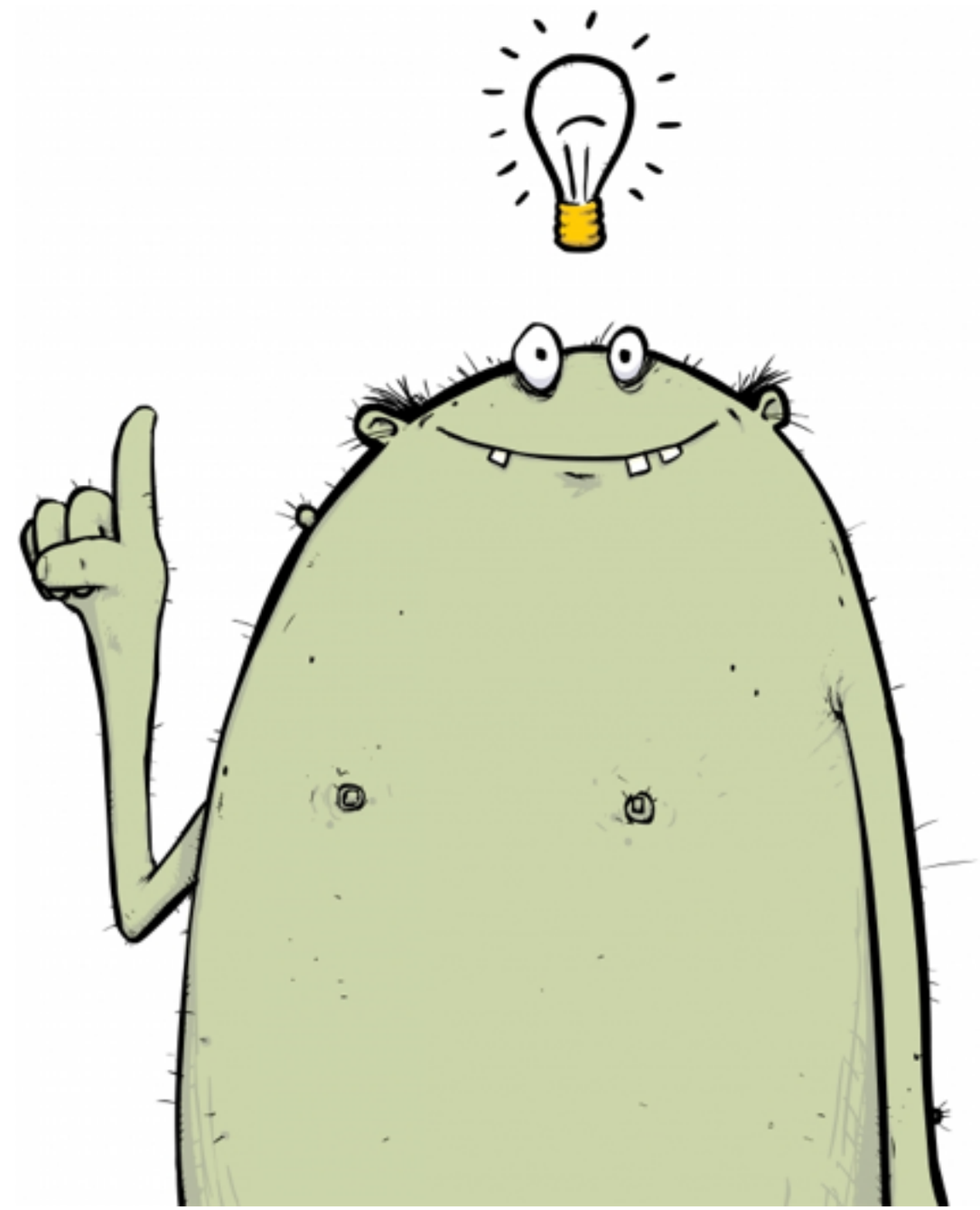

https://github.com/cloud-control/

AND FUTURE WORK

SCENARIO THEORY EVALUATION

- Currently ongoing work: using the **scenario theory** to obtain **probabilistic guarantees** for self-adaptive software

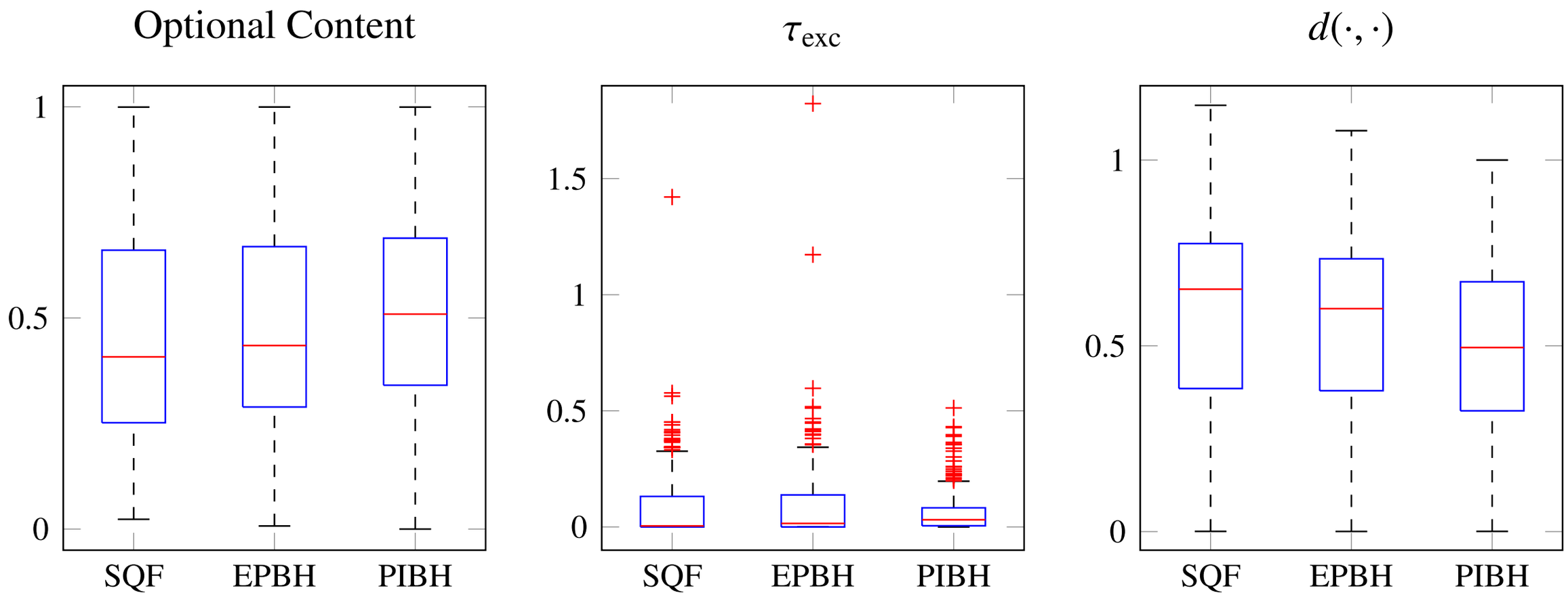

SCALING UP

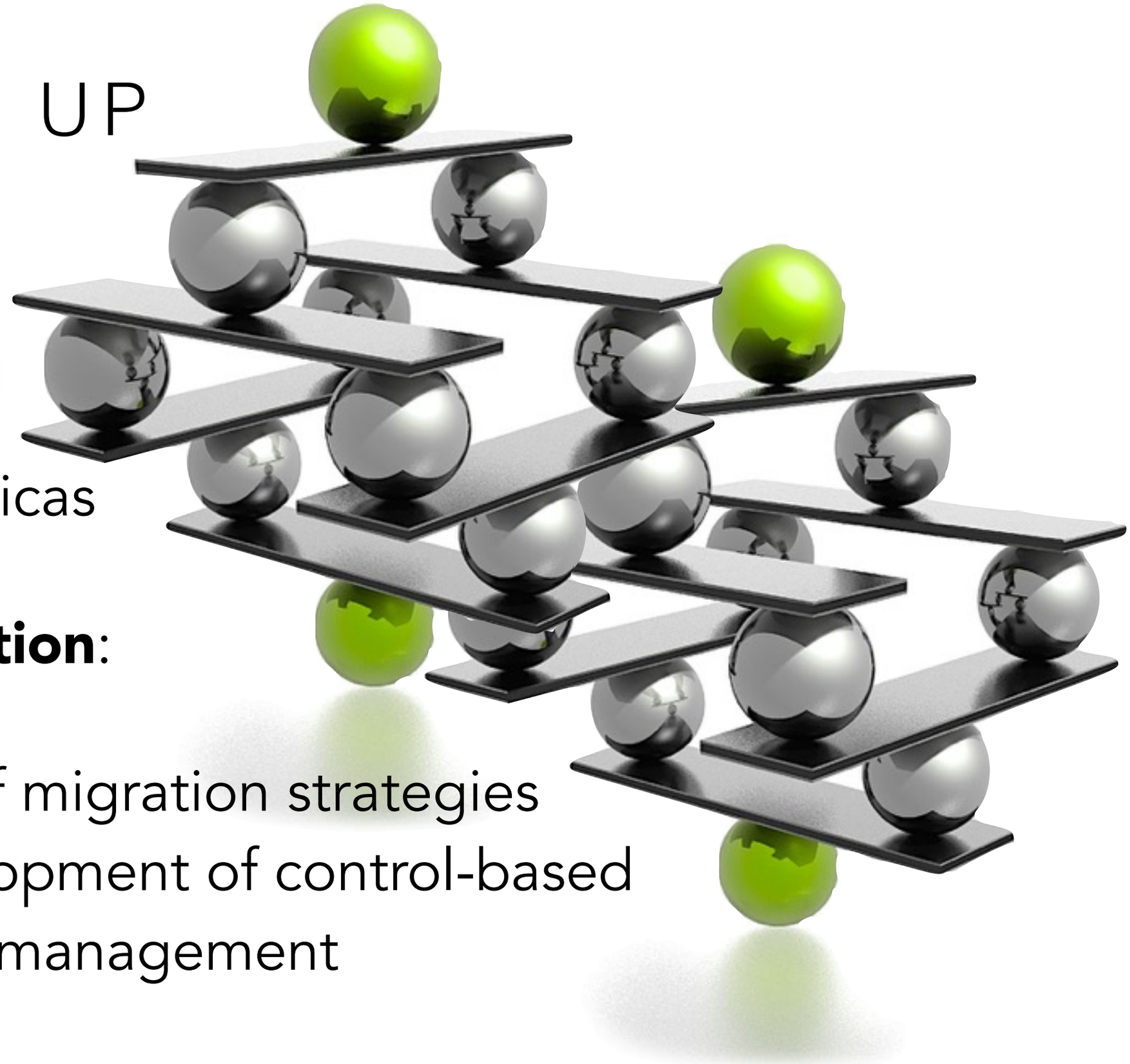

- Multiple replicas
- Need **migration**:
  - Analysis of migration strategies and development of control-based migration management

"Virtual Machine Migration in Cloud Infrastructures: Problem Formalization and Policies Proposal"
A. V. Papadopoulos and M. Maggio, CDC 2015

MIGRATION

- Preliminary result show a comparison of different proposals (e.g. Sandpiper - T. Wood et al. USENIX NSDI 2007)
- Long way to the development of proper control-theoretical proposals for migration management (for example: no technique yet takes into account the difference between pre-copy and post-copy)

THANKS! :)